CVC0.M22.0N

CVC0.M22 VALVE SERIES

METRIC Cartridge - 420 bar

Direct acting - Poppet type

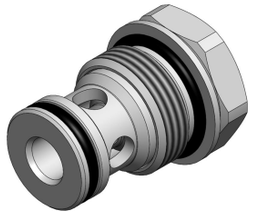

HYDRAULIC SYMBOL

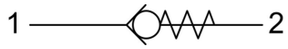

DESCRIPTION

A screw-in, cartridge style, direct acting, poppet type check valve. Main use is as a blocking or load-holding device. The CVC0.M22 allows flow passage from port 1 to 2: the cartridge has a fully guided check which is spring-biased closed until sufficient pressure is applied at port 1 to open to 2. The flow is blocked in the opposite direction (2 to 1).

CROSS SECTION

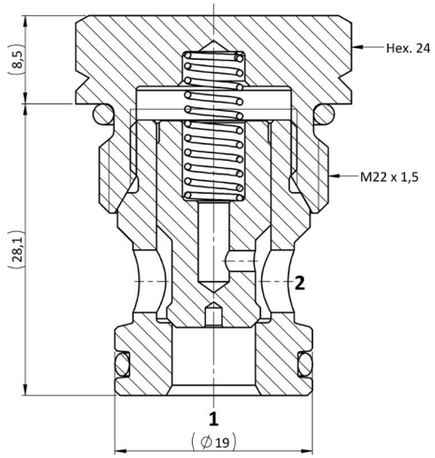

CAVITY

VH045

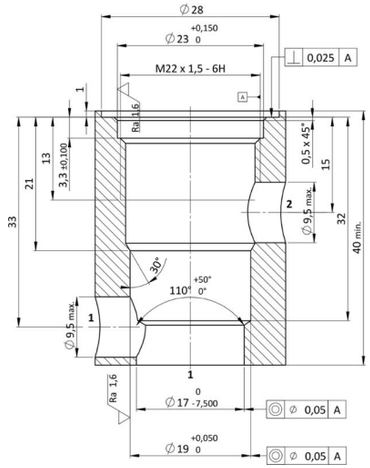

PERFORMANCE DETAILS

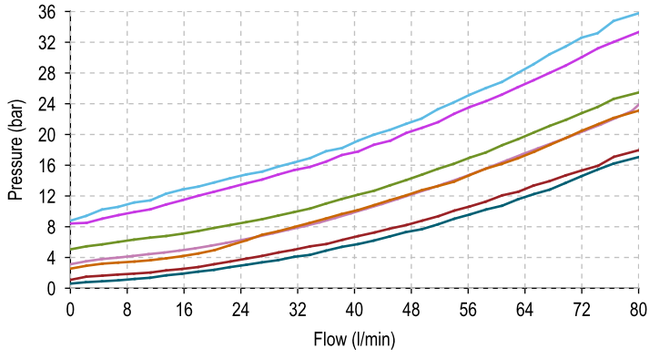

NOTE

The performance chart illustrates flow handling capacity for significant spring bias options. p/Q curves are recorded at TOil = 40°C and 46 cSt.

LEGEND

- Spring Y
- Spring P
- Spring N
- Spring G
- Spring S
- Spring V
- Spring B

TECHNICAL DATA

MAXIMUM OPERATING PRESSURE	420 bar
MAXIMUM FLOW	80 l/min
CRACKING PRESSURE	see table below
MAXIMUM INTERNAL LEAKAGE	0,10 cm^3 / min @ 10 bar 0,10 cm^3 / min @ 420 bar
EXTERNAL COMPONENT TREATMENT	Zn/Fe - standard (96h) Zn/Ni (720h) (Upon customer request)
O-RING TEMPERATURE RANGE	-30° C to 110° C (standard sealing NBR - BUNA - N) -35° C to 140° C (HNBR - Upon customer request) -23° C to 225° C (FKM - Upon customer request)
OIL TEMPERATURE RANGE	-30° C to 110° C
FLUIDS	Mineral - based or synthetics with lubricating properties
VISCOSITIES	7,4 to 420 cSt
FILTRATION	20/18/15 ISO 4406 (maximum filtration admitted)
ORIENTATION	No restrictions
INSTALLATION TORQUE	55-65 Nm Hex.24
TECH. SPEC. FOR CHARACTERIZATION	see page 689
OIL TESTING CONDITIONS	ISO VG 46 cSt
SEAL KIT CODE	SK.029 (standard sealing NBR-BUNA-N)
WEIGHT	0,080 kg

www: www.salushydraulics.pl
e-mail: pl@salushydraulics.pl
shop/sklep: www.salushydraulics.pl/sklep/

CVC0.M22.0N

ORDERING CODE

C V C 0 · M 2 2 · 0 * · 0 0 0

VALVE BASIC CODE

SIZE
METRIC M22x1,5 with Ø19 nose size

MARKING
0 = Standard factory marking. Customized marking can be done upon request.

BIAS SPRING OPTIONS

000 = Standard configuration.

Spring model code	Cracking pressure (bar)
Y	0,5
N	1,0
S	2,5
B	3,0
P	5,0
G	8,0
V	9,0

Specifications may change without notice.