Load holding valves

# Normale T11A GT 3:1 adjustable setting

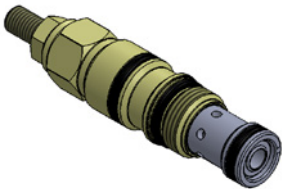

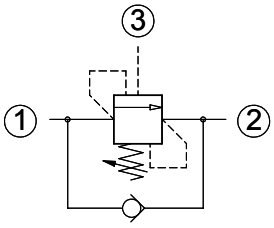


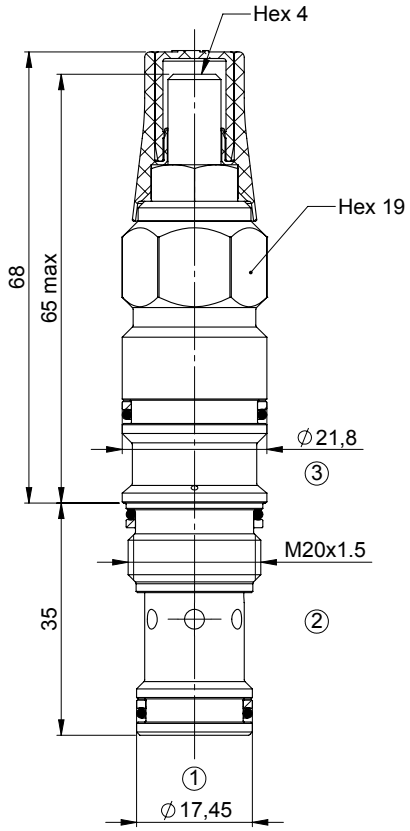


## Technical Details

| | |
|---|---|
| cavity | T11A |
| capacity | 75 lpm (20 gpm) |
| max operating pressure | 350 bar (5000 psi) |
| pilot ratio | 3:1 |
| maximum setting | 265 bar (3800 psi) |
| minimum setting | 70 bar (1000 psi) |
| pressure increase per turn | 206 bar (spring D) - 132 bar (spring M) - 33 bar (spring T) |
| pressure setting established @ | cracking pressure (1in3/min) |
| maximum valve leakage at reseat | 5 drops / minute |
| operating characteristic | standard |
| reseat | >85% |
| Maximum recommended load pressure at maximum setting | 210 bar (3000 psi) |
| valve hex size | 19 |
| valve installation torque | 40-45 Nm (30-35 lbf ft) |
| adjustment screw internal hex size | 4 |
| seal-lock hex size | 13 |
| seal-lock torque | 12-15 Nm (9-11 lbf ft) |
| valve weight | 0.150 Kg (0.33 lbs) |
| external component surface treatment | zinc plating + sealing |
| seal kit (nbr) | S00T11ASN900000 |
| seal kit (viton) | S00T11ASV900000 |
| temperature range | .-30 to 100°C (-22 to 212°F) with BunaN seals; |
| fluids | Mineral-based or synthetics with lubricating properties at viscosities of 10 to 500 $mm^2/s$ (cSt) |
| filtration | Nominal value max. 10µm (NAS 8) / ISO 4406 19/17/28 |

- Turn adjustment clockwise to increase setting
- Backpressure at port 2 adds to the effective relief setting at a ratio of 1 plus the pilot ratio times the backpressure
- Set your counterbalance valve at least 1.3 times the maximum load induced pressure
- This valve is not provided with positive seals on the pilot section
- Declared reseat value is obtained with valve set @ maximum setting

Performance curves

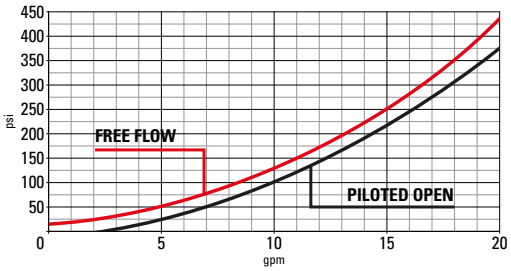


**Seals and anti-tamper options**
**0** = BUNA SEALS
**6** = BUNA tamper resistant
**2** = VITON SEALS
**7** = VITON tamper resistant

**C | 2 | 0 | | | | | 0 | 3 | 1 | 1 | 0 | 0 | A**

**Setting (bar)**

**Spring**
**T** = 35-95 bar
**M** = 70-155 bar
**D** = 140-265 bar

The information contained in this page is valid at the time of going to print. Valvole Italia reserves the right to modify its products without notice and does not accept liabilities for damages incurred as a consequence of these changes. To make sure you are seeing the latest product information, please visit www.valvoleitalia.it

© 2016 Valvole Italia s.r.l. – all rights reserved

Sede Legale Via Lenin, 32_41012 Carpi (MO)_Italy - Sede Operativa Via R. Dalla Costa 281_41122 Modena_Italy - Tel. +39 059 250043_Fax +39 059 260631 - valvoleitalia.it