Load holding valves

Normale T2A GT 4:1 adjustable setting

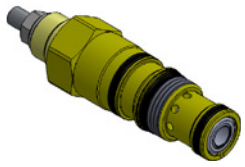

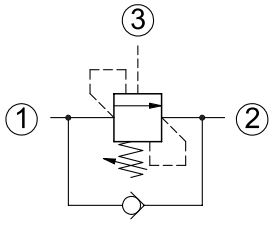

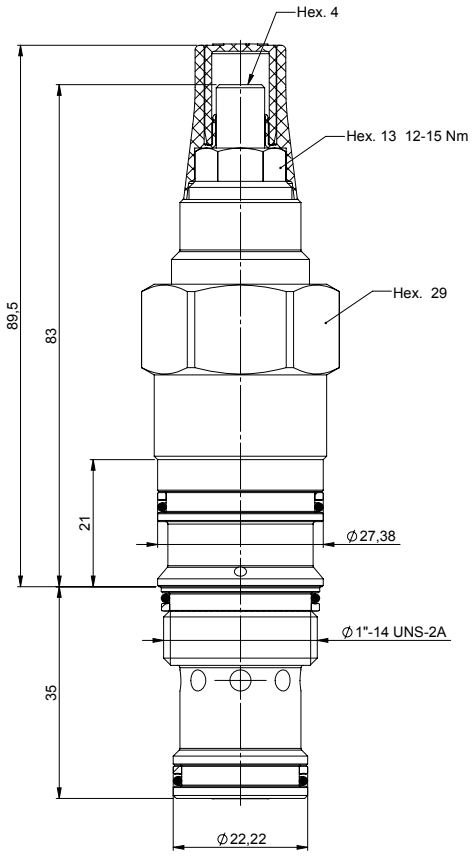

Technical Details

cavity	T2A
capacity	150 lpm (38 gpm)
max operating pressure	350 bar (5000 psi)
pilot ratio	4:1
maximum setting	290 bar (4200 psi)
minimum setting	70 bar (1000 psi)
pressure increase per turn	156 bar (spring D) - 49 bar (spring M)
pressure setting established @	cracking pressure (1in3/min)
maximum valve leakage at reseat	5 drops / minute
operating characteristic	standard
reseat	>85%
maximum recommended load pressure at maximum setting	230 bar (3350 psi)
valve hex size	29
valve installation torque	60-70 Nm (44-52 lbf ft)
adjustment screw internal hex size	4
seal-lock hex size	13
seal-lock torque	12-15 Nm (9-11 lbf ft)
valve weight	0,350 kg (0,77 lbs)
external component surface treatment	zinc plating + sealing
seal kit (nbr)	S000T2ASN900000
seal kit (viton)	S000T2ASV900000
temperature range	.-30 to 100°C (-22 to 212°F) with BunaN seals;
fluids	Mineral-based or synthetics with lubricating properties at viscosities of 10 to 500 mm²/s (cSt)
filtration	Nominal value max. 10µm (NAS 8) / ISO 4406 19/17/40

- Turn adjustment clockwise to increase setting
- Backpressure at port 2 adds to the effective relief setting at a ratio of 1 plus the pilot ratio times the backpressure
- Set your counterbalance valve at least 1.3 times the maximum load induced pressure
- This valve is not provided with positive seals on the pilot section
- Declared reseat value is obtained with valve set @ maximum setting

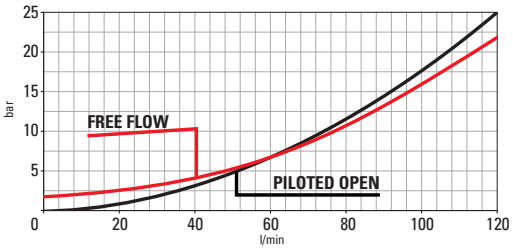

Performance curves

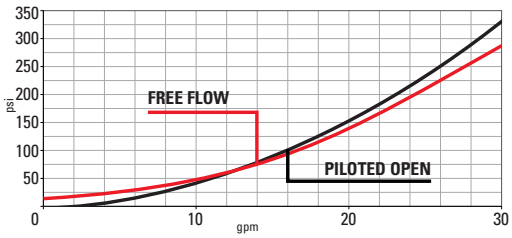

Seals
0 = BUNA SEALS
6 = BUNA tamper resistant
2 = VITON SEALS
7 = VITON tamper resistant

C | 2 | 0 | | | | | 0 | 4 | 0 | 2 | 0 | 0 | A

Setting (bar)

Spring
M = 70-210 bar
D = 140-350 bar

The information contained in this page is valid at the time of going to print. Valvole Italia reserves the right to modify its products without notice and does not accept liabilities for damages incurred as a consequence of these changes. To make sure you are seeing the latest product information, please visit www.valvoleitalia.it

© 2016 Valvole Italia s.r.l. – all rights reserved

Sede Legale Via Lenin, 32_41012 Carpi (MO)_Italy - Sede Operativa Via R. Dalla Costa 281_41122 Modena_Italy - Tel. +39 059 250043_Fax +39 059 260631 - **valvoleitalia.it**